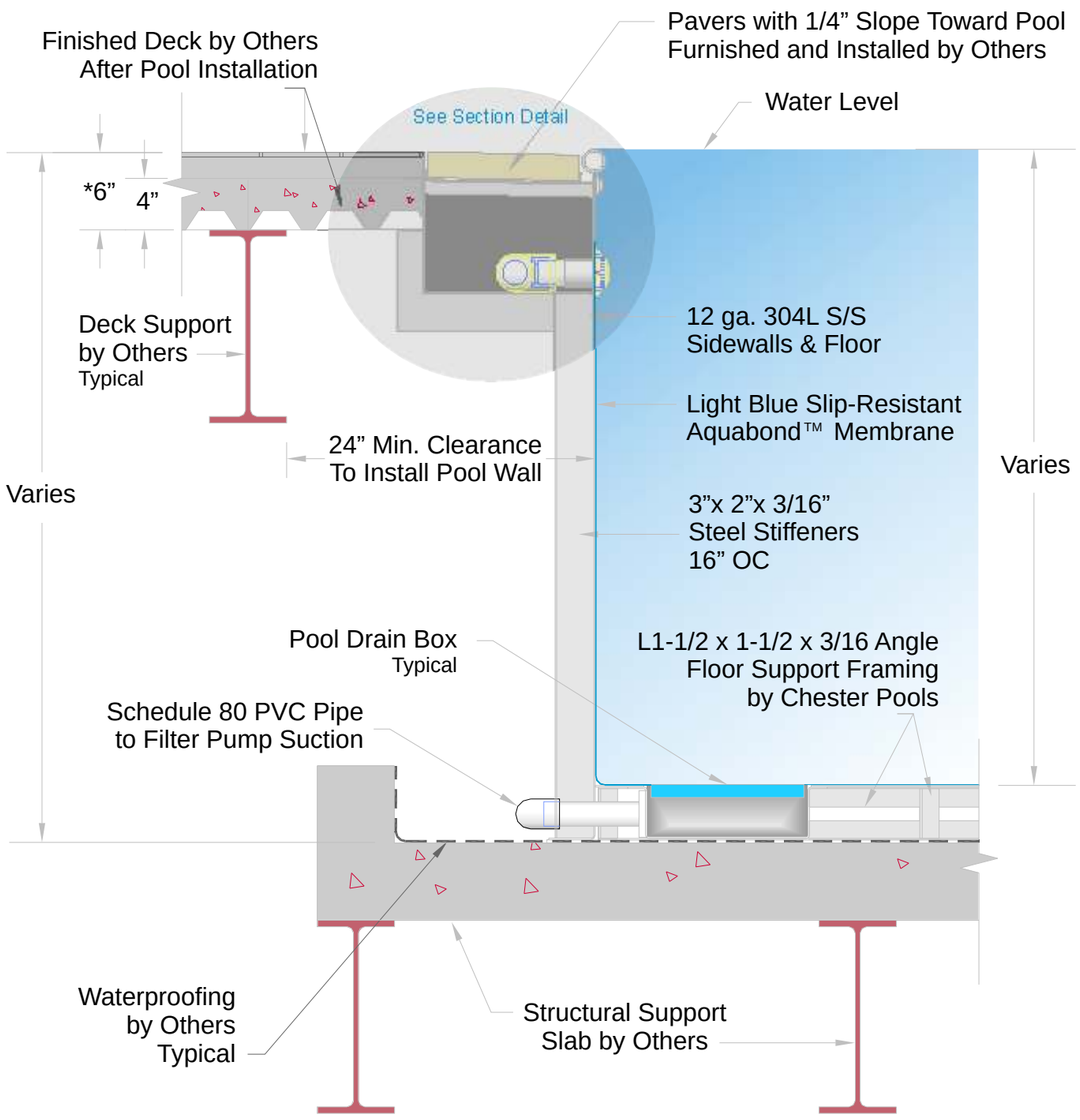

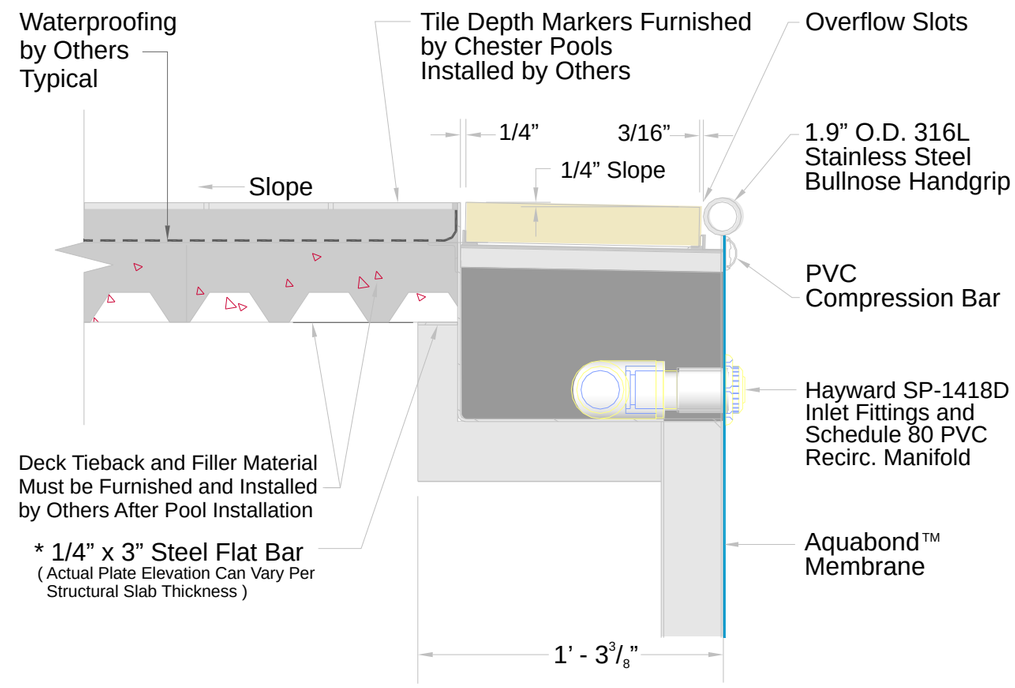

Gutter Section Detail

CHESTER POOL SYSTEMS INC.
www.chesterpools.com
(800) 248-5486 • (812) 949-7333 • FAX (812) 949-7337

Typical Gutter Wall Section